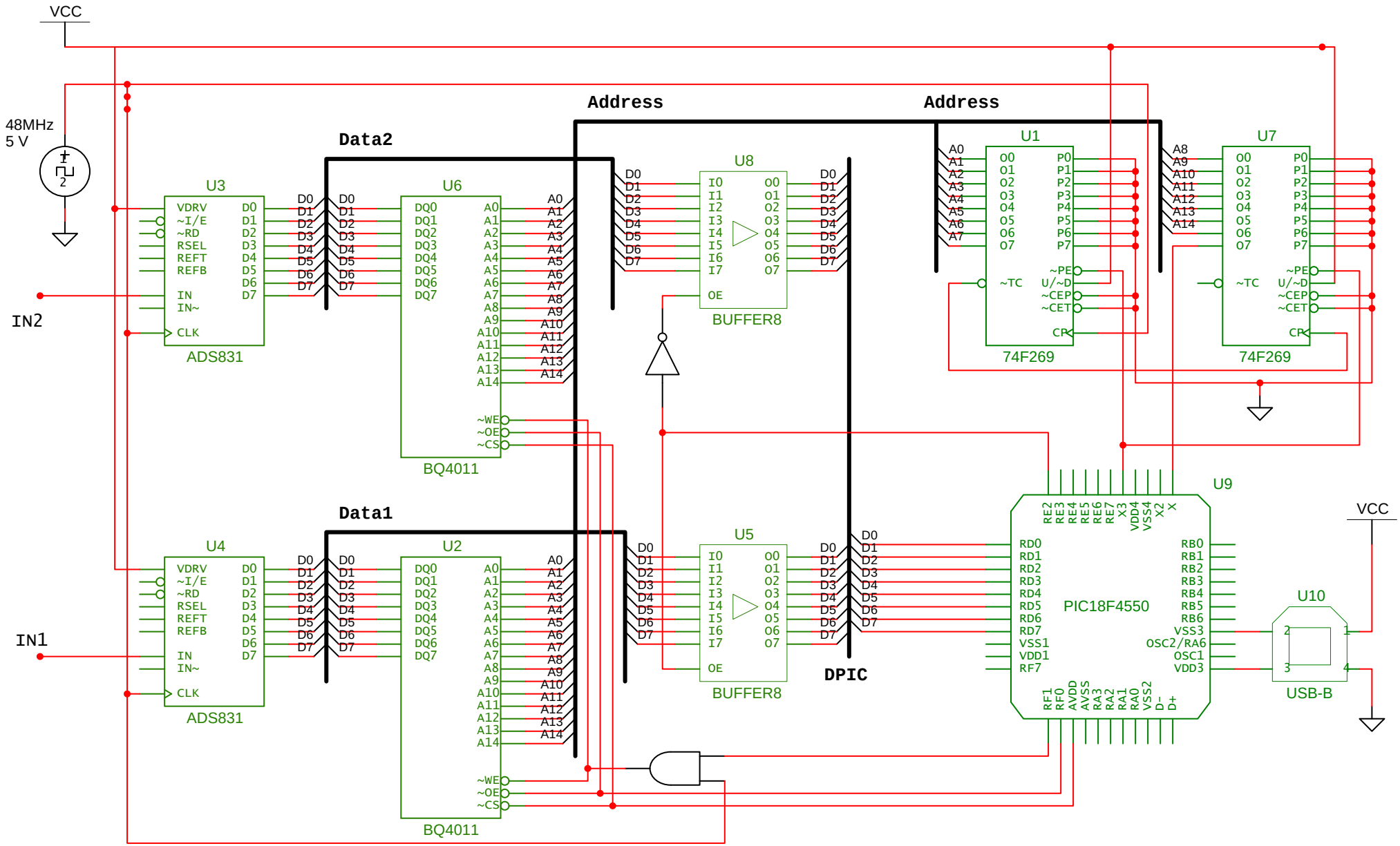
VCC
48MHz
5 V
Address
Address
Data2
Data1
U3
ADS831
U4
ADS831
U6
BQ4011
U2
BQ4011
U8
BUFFER8
U5
BUFFER8
U1
74F269
U7
74F269
U9
PIC18F4550
U10
USB-B
DPIC
IN2
IN1
VCC